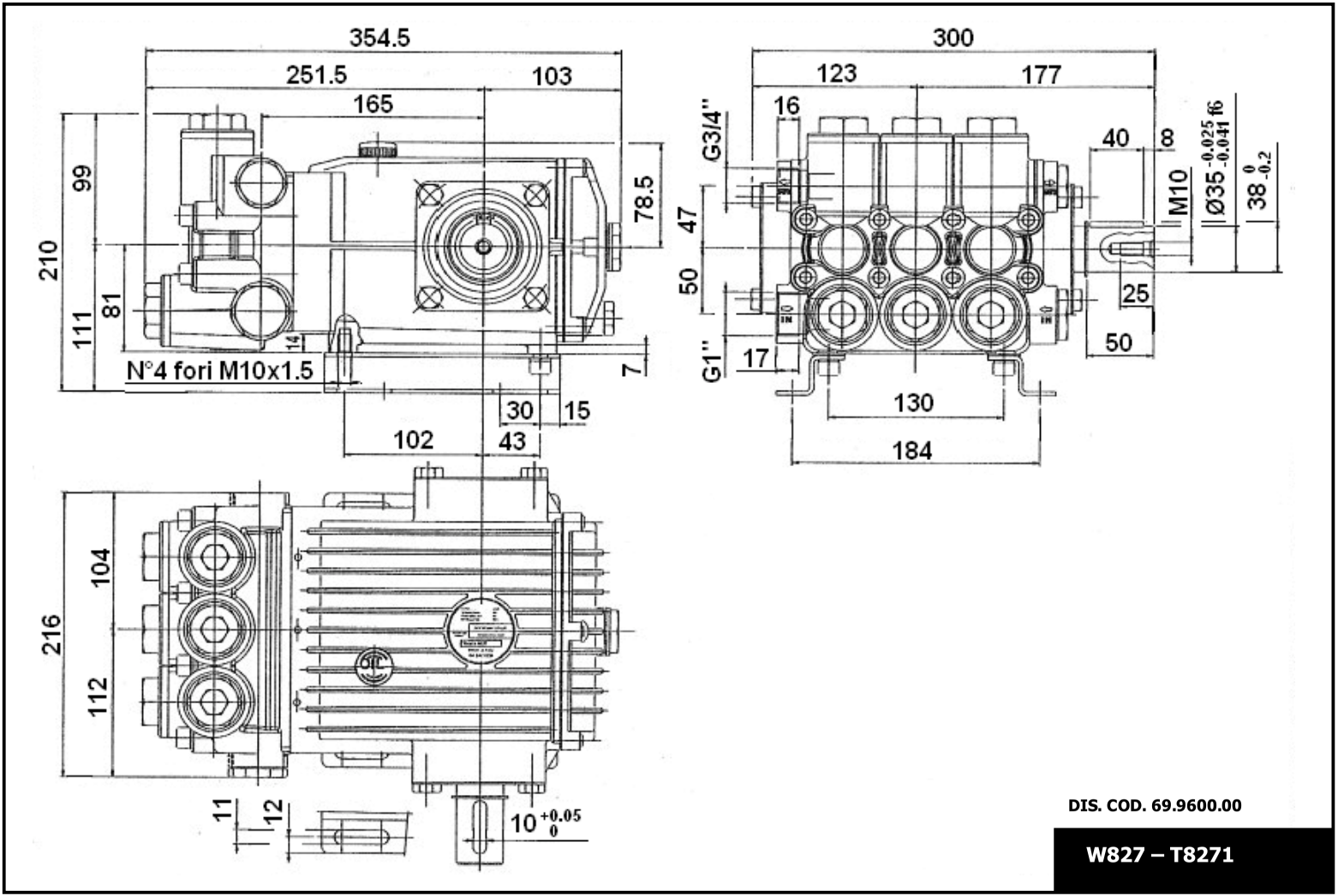

DIS. COD. 69.9600.00

W827 – T8271