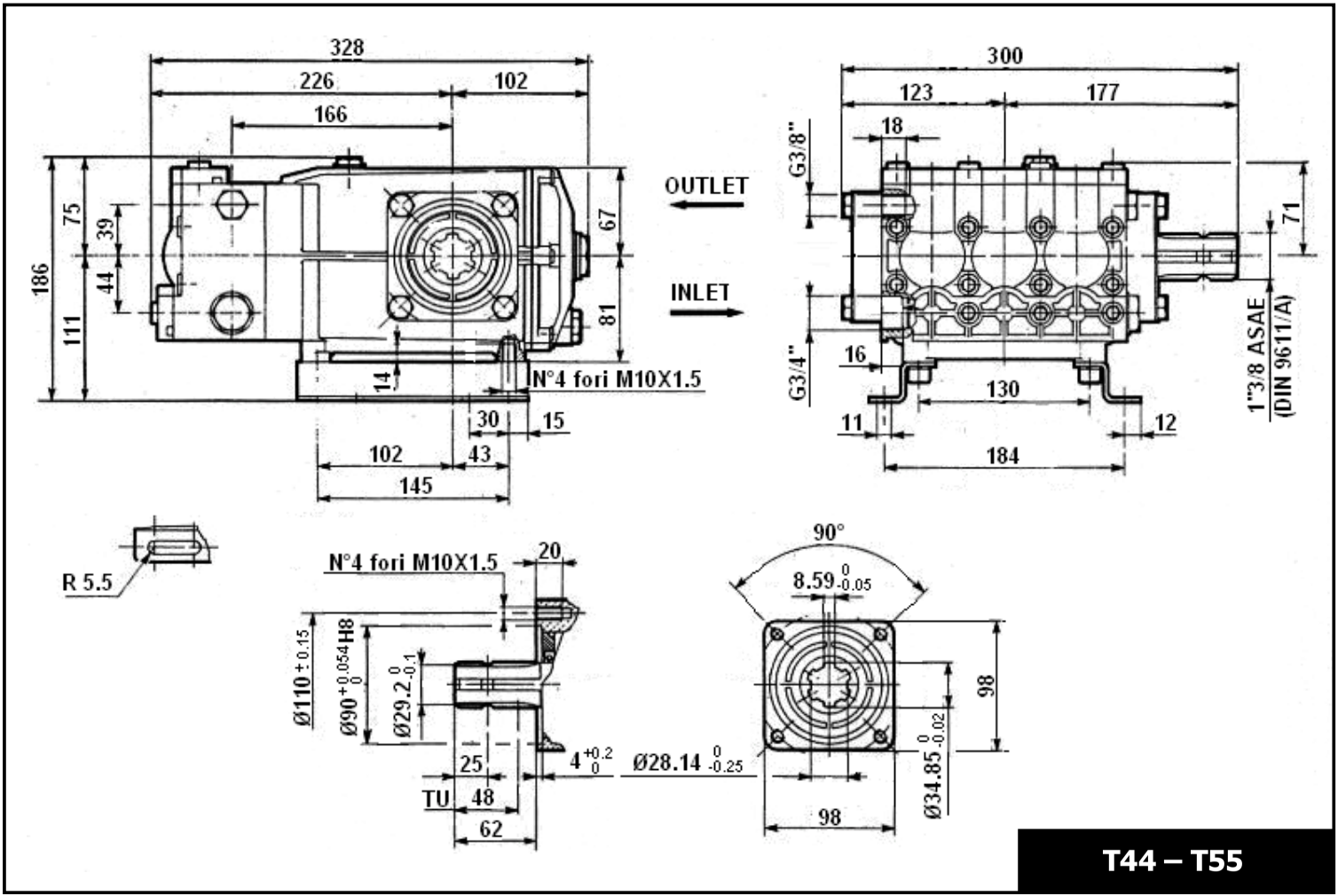
328
226
102
166
75
39
44
186
111
67
81
14
N°4 fori M10X1.5
30
15
102
43
145
OUTLET
INLET
300
123
177
18
G3/8"
71
G3/4"
16
130
11
12
184
1"3/8 ASAE
(DIN 9611/A)
R 5.5
N°4 fori M10X1.5
20
Ø110 ± 0.15
Ø90 +0.054 0 H8
Ø29.2 0 -0.1
25
4 +0.2 0
TU
48
62
90°
8.59 0 -0.05
Ø28.14 0 -0.25
98
Ø34.85 0 -0.02
98

T44 – T55